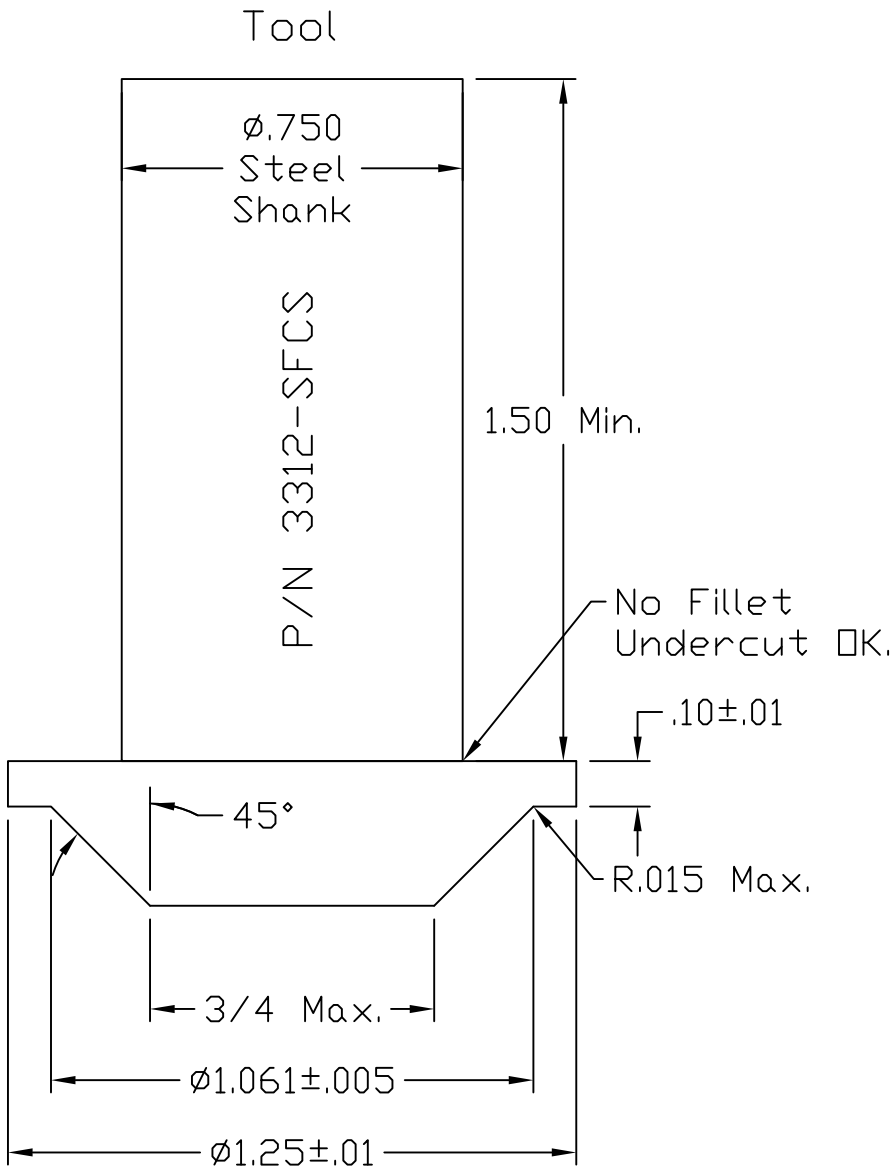

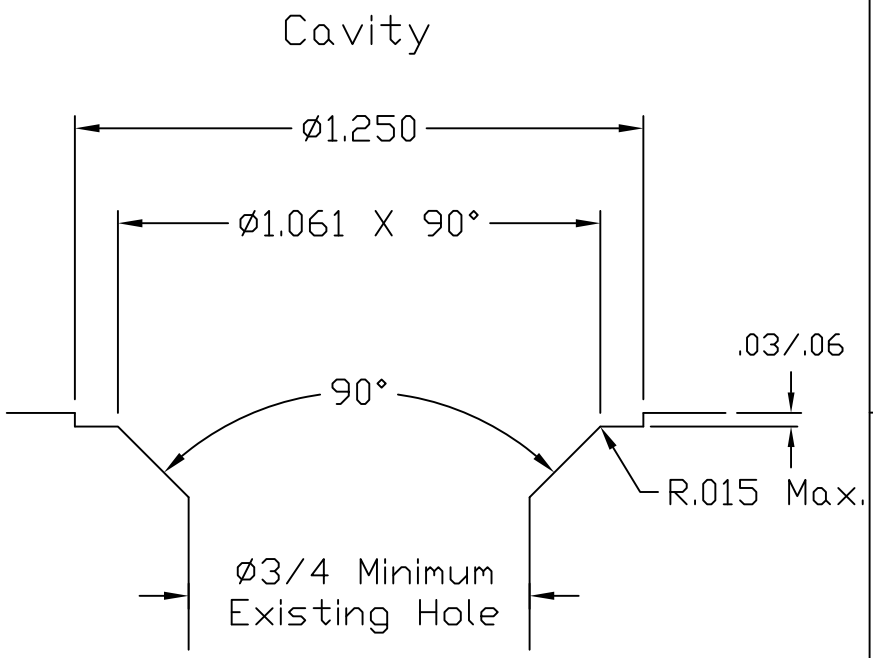

Add Part Number somewhere.

Tool Material: Steel Shank Carbide Cutter

To machine 6061 Aluminum.

3312-SFCS-# Tool Rev. 01

Spot Face and CSK Tool.

C3312 Doering Valve Cavity

6343 River Rd. SE * Clear Lake, MN 55319
Phone: 320 743-2276 Fax: 743-3723
mailbox@doering.com www.doering.com

DOERING CO