2/7/13 5:05 pm (1705), Russ: Change Second O-Ring Configuration and add .045 to accommodate.

Orifice ø.158 with ø.095 Restriction
Throttle of Flow area = .0125 Inch^2
Full Flow Achieved at .08" Travel.
Recommended Stroke .09"
Valve is Solid and can be damaged at .13" Travel.
Installation Torque 20 Foot Pounds. Spanner Tool Required.

2/7/13 Russ: Removed Pressure Rating for Now

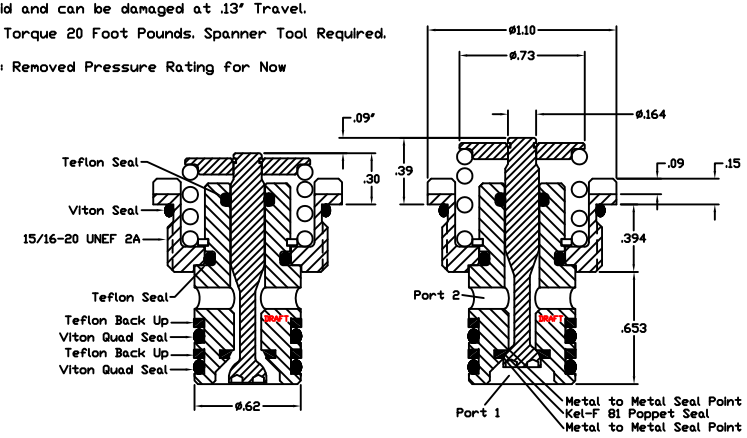

Doering Valve +045
Actuated .09

Doering Valve +045
Non Actuated

Doering Valve

DRAFT Russ 2/7/13 5:05pm (1705) (2/2/13)

6343 River Rd. SE * Clear Lake, MN 55319
Phone: 320 743-2276 Fax: 743-3723
mailbox@doering.com www.doering.com
DOERING CO

Slot Width .13". Not previously illustrated.

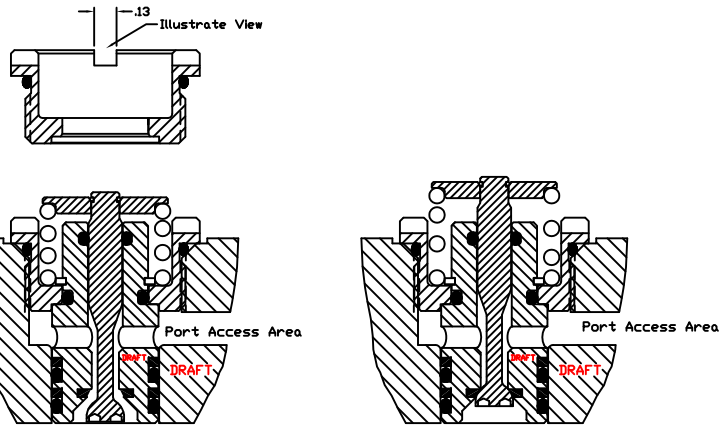

Doering Valve +045
Actuated .09
In Cavity +045

Doering Valve +045
Non Actuated
In Cavity +045

Doering Valve & Cavity +045

DRAFT Russ 2/7/13 5:05pm (1705) (2/2/13)

6343 River Rd. SE * Clear Lake, MN 55319
Phone: 320 743-2276 Fax: 743-3723
mailbox@doering.com www.doering.com
DOERING CO

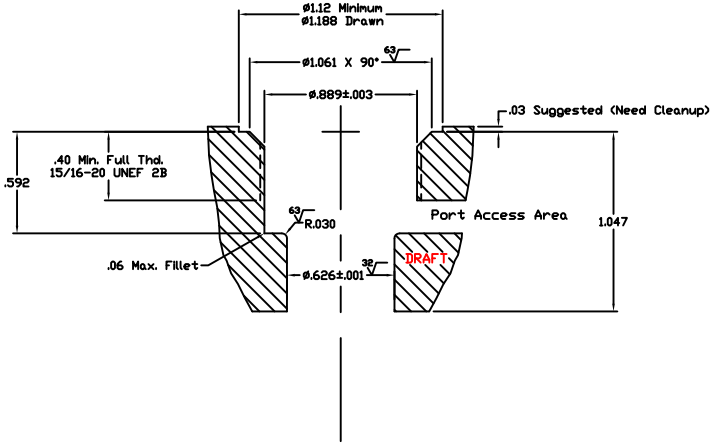

Doering Cavity +045

DRAFT Russ 2/7/13 5:05pm (1705) (1/31/13)

6343 River Rd. SE * Clear Lake, MN 55319
Phone: 320 743-2276 Fax: 743-3723
mailbox@doering.com www.doering.com
DOERING CO

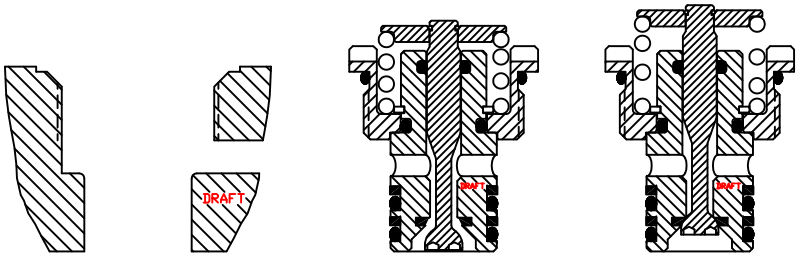

Exploded Views

Doering Valve

DRAFT Russ 2/7/13 5:05pm (1705) (2/7/13)

6343 River Rd. SE * Clear Lake, MN 55319
Phone: 320 743-2276 Fax: 743-3723
mailbox@doering.com www.doering.com
DOERING CO